Comment	Origin	Type	Signal-/TAG-No.	Path
				1
				2
				3
				4
Start air compressor	fr. page no. 201/85	1	HH 70001	5
				6
				7
				8
				9
				10
				11
				12
				13
				14
				15
				16
				17
				18
				19
				20
				21
Emergency shut down	Contact ESD-relay	1	HA 70001	22
				23
Press. before 1.stage	Value < Max2	1	PHH 70001	24
				25
before stage 2 NC1	Value > Max2	1	THH 70015	26
before stage 3 NC1	Value > Max2	1	THH 70025	27
Discharge NC1	Value > Max2	1	THH 70035	28
				29
Surge protection	from page 212/76	1	UHH 70074	30
				31
				32
				33
				34
				35
				36
				37
				38
				39
				40
				41
				42
				43
				44
				45
				46
				47
				48

Function

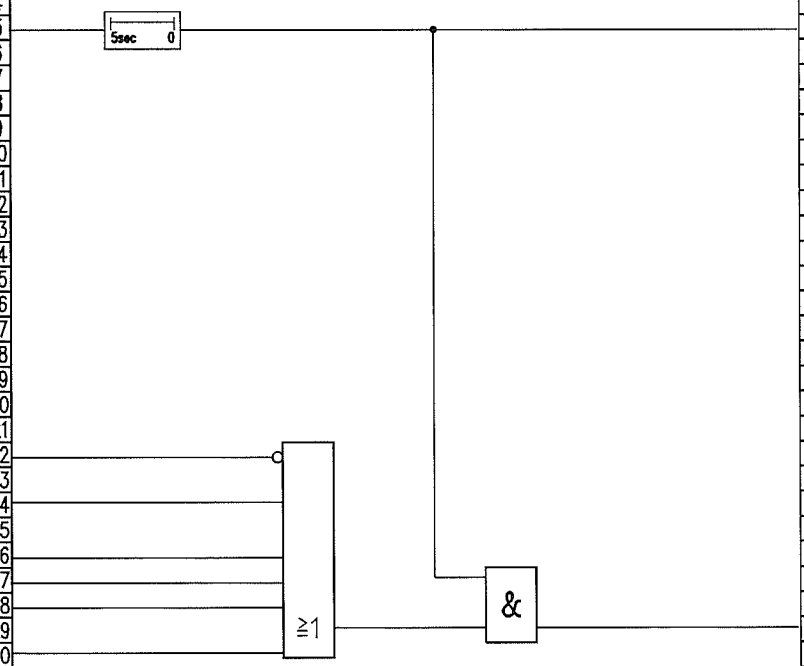

Path	Type	Signal/TAG-No.	Destination	Comment
51				
52				
53				
54				
55	1	US 70001_dyn	to page no. 202/5	
56				
57				
58				
59				
60				
61				
62				
63				
64				
65				
66				
67				
68				
69				
70				
71				
72				
73				
74				
75				
76				
77				
78				
79	1	US 70000_1	to page no. 202/47	Trip conditions
80				
81				
82				
83				
84				
85				
86				
87				
88				
89				
90				
91				
92				
93				
94				
95				
96				
97				
98				

JOB NO.	FILE NO	REV.	DATE	REVISIONS	BY	CHKD.
		Rev3	08.6.07	"as built"	Frohn	Stippich
		Rev2	02.2.06		Frohn	Eichler

PROJECT NAME: ASU KOSICE

PLANT PART: NITROGEN COMPRESSORS

AIR LIQUIDE

Air Liquide AGS GmbH
Fütingsweg 34
47805 Krefeld

DRAWING NAME:
N2 COMPRESSOR 1
TRIP CONDITIONS MAC US70000.1

SIZE: A3

FUNKTION DIAGRAM

DRWG. NO.: K70101_203.dwg

PROJ. NO.: K70101

REPLACES: REPLACED BY: BASED:

DATE: 17.06.2005
AUTHOR: Frohn
CHECK: Eichler
STD.:

Path	Comment	Origin	Type	Signal-/TAG-No.
5	Reset Trip NC1	Software push button	1	HS 70000
9	Trip cold box	from page no.102/63	1	US20000_dyn
9	one shot			

Function

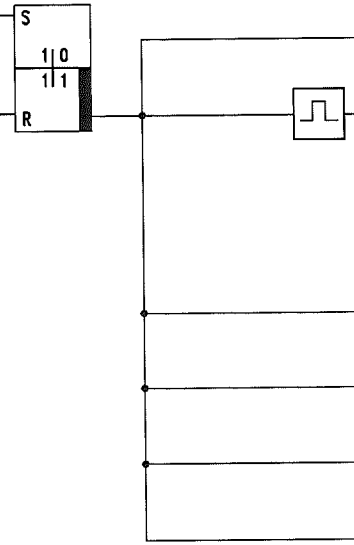

Path	Type	Signal/TAG-No.	Destination	Comment
56	1	US 70000_2	Alarm OS	Partial Trip NC1
59	1	US 70000_2_dyn	Y = 0%, manual	FIC 70074, Y=100%,
60				manual
67	1	US70000_2	to page no. 210/9	Open recycle valve
68				US 70074
70	1	US70000_2	PIC 70035	Position guide vane
71				FV70010 Y=0%,
72				manual
73	1	US70000_2	HIC 70036 / Y=0%	Charge GAN
76	1	US70000_2	to page no. 214/30	Open Blow off valve
77				UV 70035

JOB NO.	FILE NO	REV.	DATE	REVISIONS	BY	CHKD.
		Rev3	08.6.07	"as built"	Frohn	Stippich
		Rev2	02.2.06		Frohn	Eichler

PROJECT NAME: ASU KOSICE

PLANT PART: N2 COMPRESSORS

AIR LIQUIDE

Air Liquide AGS GmbH
Fütingsweg 34
47805 Krefeld

DRAWING NAME: N2 COMPRESSOR 1
PARTIAL TRIP US70000.2

SIZE: A3 — FUNKTION DIAGRAM

DRWG. NO.: K70101_204.dwg

PROJ. NO.: K70101

REPLACES: REPLACED BY:

DATE: 17.06.2005
AUTHOR: Frohn
CHECK: Eichler
STD.:

BASED:

Path	Comment	Origin	Type	Signal-/TAG-No.
9	MP-GAN	Y < 1%	1	HIC 70036
10	HK70036 closed			
11	Blow off valve	Y < 1%	1	HIC 70035
12	closed			
13	Guide vane NC1	End position switch	1	GL 70010
14	closed			
15	Recycle valve NC1	End position switch	1	GH 70074
16	opened			
17	Oil pressure NC1	Value < Min	1	PL 70854
19	Oil circuit NC1	Value < Min	1	TL 70854
23	Trip NC1	fr. page no. 202/59	1	US 70000_2
25	NC1 main drive	Check back signal	1	EH 70001
27	Enabeling main motor	fr. page no. 206/73	1	EI 70001
28	disabled			
31	Cooling water	Value < Min	1	FL 80001
33	Entrance open	from page no.201/73	1	HS 70001_2
35	LP-GAN to compr.	Y > 99%	1	F20005_Y100
36	open			
37	LP-GAN-product	Value < Min	1	FL 20005

Function

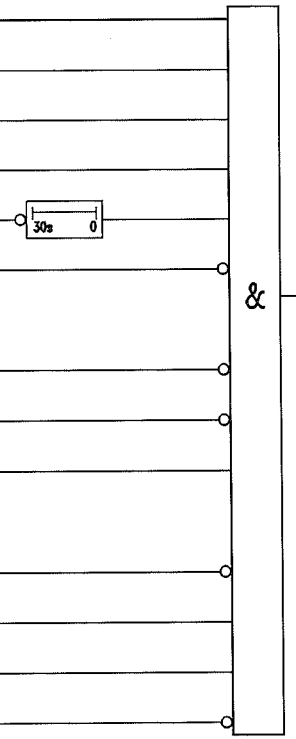

Path	Type	Signal/TAG-No.	Destination	Comment
67	1	UH 70003	Monitoring OS	"Ready to start NC1"
70	1	UH 70003	to page no. 201/32	Ready to start NC1

Rev3	08.6.07	"as built"	Frohn	Stippich
Rev2	02.2.06		Frohn	Eichler
JOB NO.	FILE NO.	REV.	DATE	REVISIONS	BY	CHKD.

PROJECT NAME: ASU KOSICE

PLANT PART: NITROGEN COMPRESSORS

AIR LIQUIDE

Air Liquide AGS GmbH
Fütingsweg 34
47805 Krefeld

DRAWING NAME:
N2 COMPRESSOR 1
READY TO START UH70003

SIZE: A3

FUNKTION DIAGRAM

DRWG. NO.: K70101_205.dwg

PROJ. NO.: K70101

REPLACES: REPLACED BY: BASED:

DATE: 17.06.2005
AUTHOR: Frohn
CHECK: Eichler
STD.:

Rang.	Comment	Origin	Type	Signal-/TAG-No.	Path
					1
					2
					3
					4
					5
					6
	NC1 motor drive	Check back signal	1	EH 70001	7
					8
					9
					10
					11
					12
					13
					14
					15
					16
					17
					18
					19
					20
					21
					22
					23
					24
					25
					26
					27
					28
					29
					30
					31
					32
					33
					34
					35
					36
					37
					38
					39
					40
					41
					42
					43
					44
					45
					46
					47
					48

Function

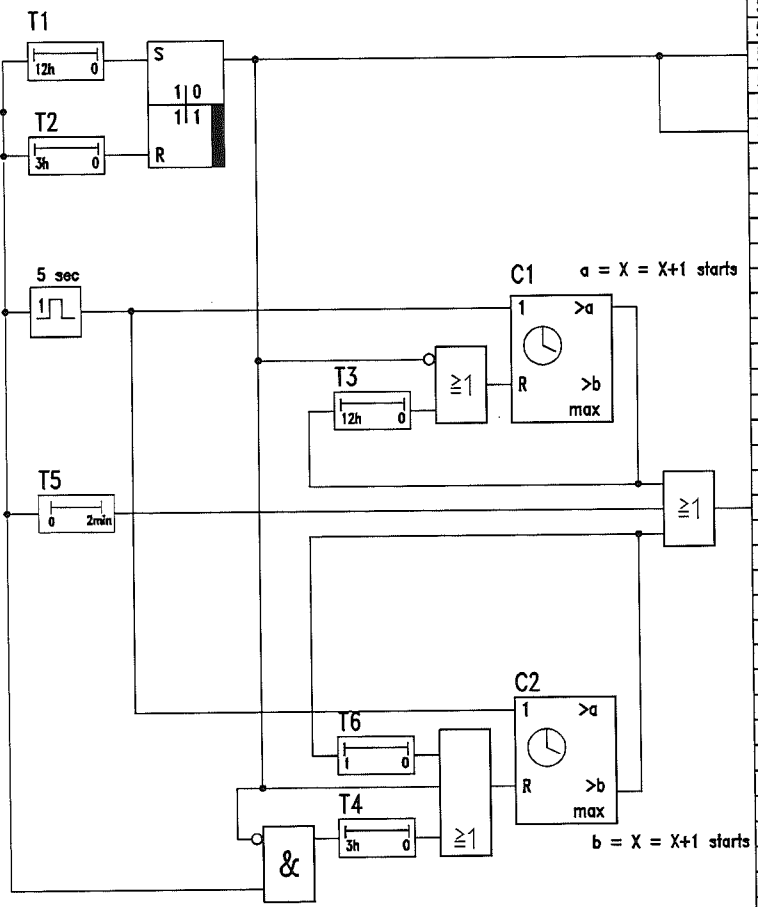

T1 = Time for motor is cold
T2 = Time for motor is warm
T3 = Reset time after 3 failed cold starts
T4 = Reset time adfer 1 sucsessful warm start
T5 = Minimum disable time
C1 = Counter for cold starts
C2 = Counter for warm starts

Path	Type	Signal/TAG-No.	Destination	Comment	Rang.
51					
52					
53					
54					
55	1			Main motor cold	
56					
57					
58	0			Main motor warm	
59					
60					
61					
62					
63					
64					
65					
66					
67					
68					
69					
70					
71					
72					
73	1	EL 70001	to page no. 205/27	Enabeling switch control	
74				main motor	
75					
76					
77					
78					
79					
80					
81					
82					
83					
84					
85					
86					
87					
88					
89					
90					
91					
92					
93					
94					
95					
96					
97					
98					

JOB NO.	FILE NO.	REV.	DATE	REVISIONS	BY	CHKD.
		Rev3	08.6.07	"as built"	Frohn	Stippich
		Rev2	02.2.06		Frohn	Eichler

PROJECT NAME: ASU KOSICE

PLANT PART: NITROGEN COMPRESSORS

AIR LIQUIDE

Air Liquide AGS GmbH
Fütingsweg 34
47805 Krefeld

DRAWING NAME: N2 COMPRESSOR 1
ENABELING MAIN MOTOR EL70001

SIZE: A3

FUNKTION DIAGRAM

DRWG. NO.: K70101_206.dwg

PROJ. NO.: K70101

REPLACES: REPLACED BY: BASED:

DATE: 17.06.2005
AUTHOR: Frohn
CHECK: Eichler
STD.:

Rang.	Comment	Origin	Type	Signal-/TAG-No.	Path
					1
					2
					3
	NC1 main drive on	Check back signal	1	EH 70001	4
					5
					6
					7
					8
					9
	Oil heater NC1 on	Check back signal	1	EH 70810	10
					11
					12
					13
	Temp. oil heater	Limit switch > Max	0	TH 70815	14
					15
					16
					17
	Temp. oil heater	Limit switch > Max	0	TH 70810	18
					19
					20
					21
					22
					23
					24
					25
					26
					27
	Oil heater NC1 on	Check back signal	1	EH 70815	28
					29
					30
					31
					32
					33
					34
					35
					36
					37
					38
					39
					40
	Temp. oil tank	Limit switch < Max	1	THH 70810	41
					42
	Temp oil tank	Control contact	1	TC 70810	43
					44
					45
	Temp. oil tank	Limit switch < Max	1	THH 70815	46
	Temp oil tank	Control contact	1	TC 70815	47
					48

Function

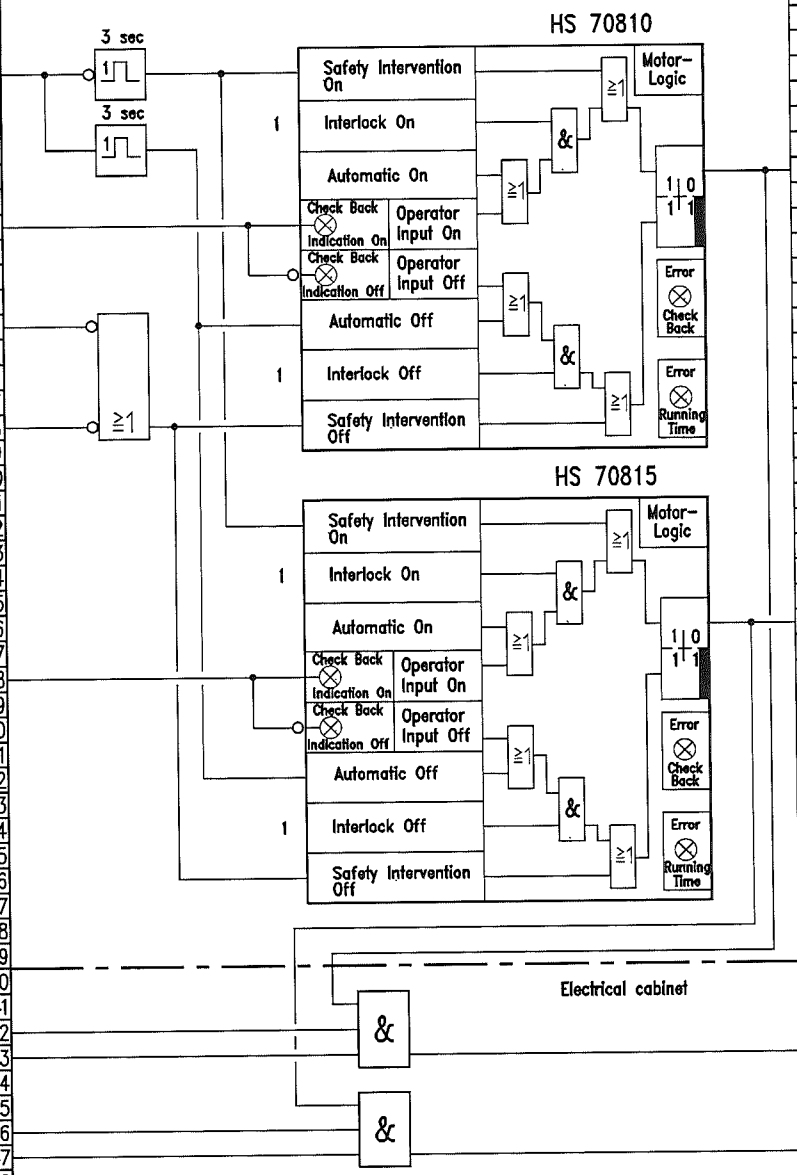

Path	Type	Signal/TAG-No.	Destination	Comment	Rang.
51					
52					
53					
54					
55					
56					
57					
58	1	US 70810	Signal to MCC	Oil heater NC1 on	
59					
60					
61					
62					
63					
64					
65					
66					
67					
68					
69					
70					
71					
72					
73					
74					
75					
76	1	US 70815	Signal to MCC	Oil heater NC1 on	
77					
78					
79					
80					
81					
82					
83					
84					
85					
86					
87					
88					
89					
90					
91					
92					
93	1	W 70810	ON	Oil heater NC1	
94					
95					
96					
97	1	W 70815	ON	Oil heater NC1	
98					

JOB NO.	FILE NO	REV.	DATE	REVISIONS	BY	CHKD.
		Rev3	08.6.07	"as built"	Frohn	Stippich
		Rev2	02.2.06		Frohn	Eichler

PROJECT NAME: ASU KOSICE

PLANT PART: NITROGEN COMPRESSORS

AIR LIQUIDE

Air Liquide AGS GmbH
Fütingsweg 34
47805 Krefeld

DRAWING NAME: N2 COMPRESSOR 1
OIL HEATER HS70810 / HS70815

SIZE: A3

FUNKTION DIAGRAM

DRWG. NO.: K70101_207.dwg

PROJ. NO.: K70101

REPLACES: REPLACED BY: BASED:

DATE: 17.06.2005
AUTHOR: Frohn
CHECK: Eichler
STD.:

Rang.	Comment	Origin	Type	Signal-/TAG-No.	Path
					1
					2
					3
					4
	Oil pressure NC1	Value < Min1	1	PL 70854	5
					6
					7
					8
					9
	NC1 main drive on	Check back signal	1	EH 70001	10
					11
					12
					13
					14
					15
					16
					17
					18
					19
	Oil demister on	Check back signal	1	EH 70803	20
					21
					22
					23
	Aux. oil pump on	Check back signal	1	EH 70820	24
					25
					26
					27
					28
					29
					30
					31
					32
					33
					34
					35
					36
					37
					38
					39
	Reset Trip NC1	Software reset button	1	HS 70000	40
					41
					42
					43
					44
	Seal gas press. Min	Pressure switch	0	PL 70753	45
					46
					47

Function

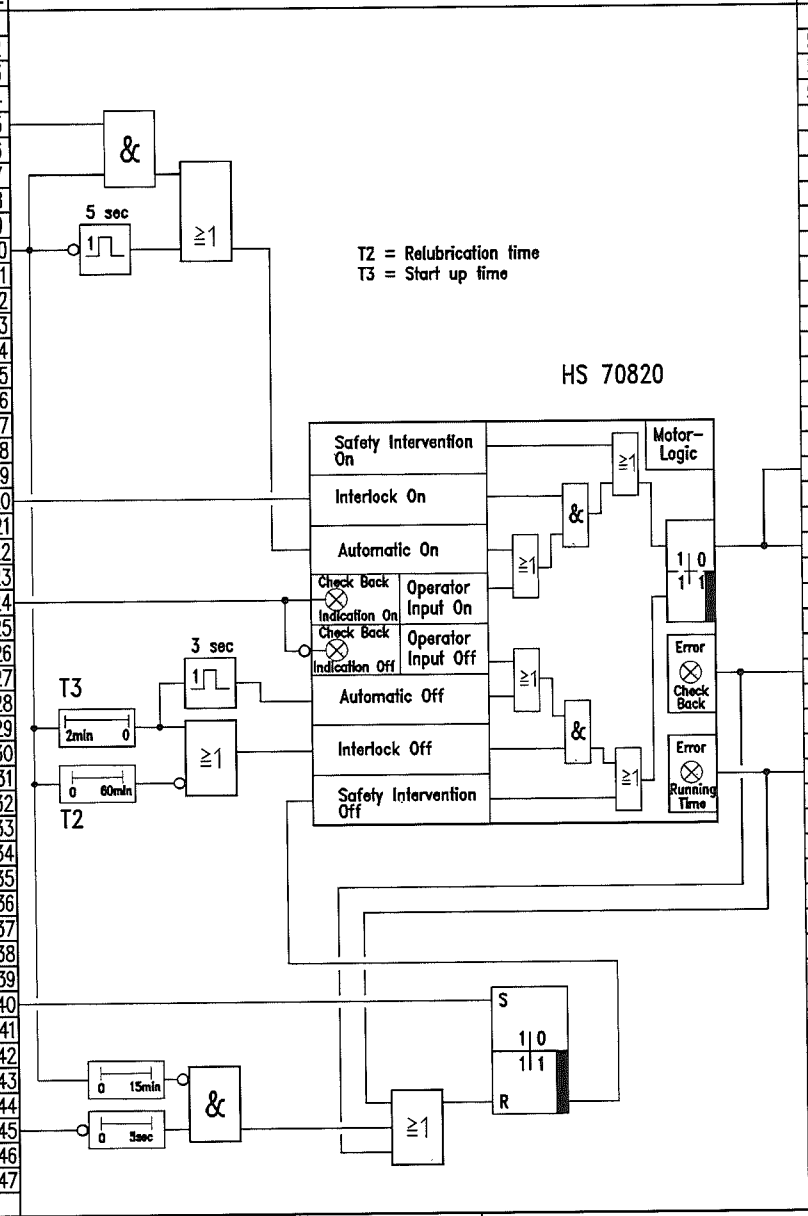

Path	Type	Signal/TAG-No.	Destination	Comment	Rang.
51					
52					
53					
54					
55					
56					
57					
58					
59					
60					
61					
62					
63					
64					
65					
66					
67					
68					
69	1	HS 70803	to page no. 209/10	Oil demister NC1 on	
70					
71					
72	1	HS 70820	Signal to MCC	Aux. oil pump NC1 on	
73					
74					
75					
76					
77	1	HS 70820_CB	Alarm OS	"Check back error"	
78				Aux. oil pump NC1	
79					
80					
81	1	HS 70820_RT	Alarm OS	"Running time error"	
82				Aux. oil pump NC1	
83					
84					
85					
86					
87					
88					
89					
90					
91					
92					
93					
94					
95					
96					
97					
98					

JOB NO.	FILE NO.	REV.	DATE	REVISIONS	BY	CHKD.
		Rev3	08.6.07	"as built"	Frohn	Stippich
		Rev2	02.2.06		Frohn	Eichler

PROJECT NAME: ASU KOSICE

PLANT PART: NITROGEN COMPRESSORS

AIR LIQUIDE

Air Liquide AGS GmbH
Fütingsweg 34
47805 Krefeld

DRAWING NAME:
N2 COMPRESSOR 1
AUXILLIARY OIL PUMP HS70820

SIZE: A3

FUNKTION DIAGRAM

DRWG. NO.: K70101_208.dwg

PROJ. NO.: K70101

REPLACES: REPLACED BY: BASED:

DATE: 17.06.2005
AUTHOR: Frohn
CHECK: Eichler
STD.:

Rang.	Comment	Origin	Type	Signal-/TAG-No.	Path
	Oil demister on	Check back signal	1	EH 70803	18
	Aux. oil pump on	Check back signal	1	EH 70820	24
	Reset Trip NC1	Software reset button	1	HS 70000	33

Function

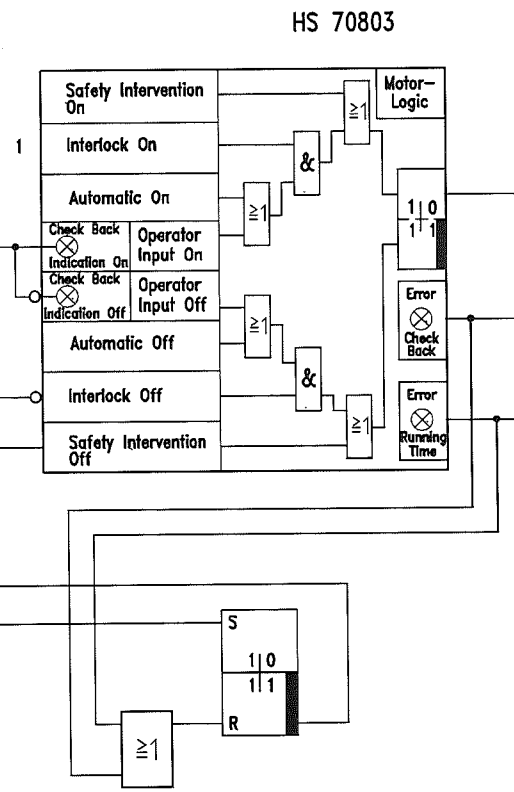

Path	Type	Signal/TAG-No.	Destination	Comment	Rang.
66	1	HS 70803	Signal to MCC	Oil demister NC1 on	
71	1	HS 70803_CB	Alarm OS	"Check back error"	
				Oil demister NC1	
75	1	HS 70803_RT	Alarm OS	"Running time error"	
				Oil demister NC1	

JOB NO.	FILE NO	REV.	DATE	REVISIONS	BY	CHKD.
		Rev3	08.6.07	"as built"	Frohn	Stippich
		Rev2	02.2.06		Frohn	Eichler

PROJECT NAME: ASU KOSICE

PLANT PART: NITROGEN COMPRESSORS

AIR LIQUIDE

Air Liquide AGS GmbH
Fütingsweg 34
47805 Krefeld

DRAWING NAME:
N2 COMPRESSOR 1
OIL DEMISTER HS70803

SIZE: A3

FUNKTION DIAGRAM

DRWG. NO.: K70101_209.dwg

PROJ. NO.: K70101

REPLACES: REPLACED BY: BASED:

DATE: 17.06.2005
AUTHOR: Frohn
CHECK: Eichler
STD.:

Rang.	Comment	Origin	Type	Signal-/TAG-No.	Path
					1
					2
					3
					4
	NC1 main drive off	fr. page no. 201/75	0	HS 70001	5
					6
	Trip NC1	fr. page no. 202/61	1	US 70000	7
					8
	Partial Trip NC1	fr. page no. 204/67	1	US 70000_2	9
					10
	Surge protection	fr. page no. 212/55	1	USHH 70074	11
					12
					13
					14
					15
					16
					17
					18
					19
					20
					21
					22
					23
					24
					25
					26
					27
					28
					29
					30
					31
					32
					33
	Main drive on	from page 201/55	1	EH 70001_del	34
	Recycle valve open	End position switch	1	GH 70074	35
	Gas flow outlet	Y > 99%	1	HIC 70074	36
					37
					38
					39
					40
					41
					42
					43
					44
					45
					46
					47
					48

Function

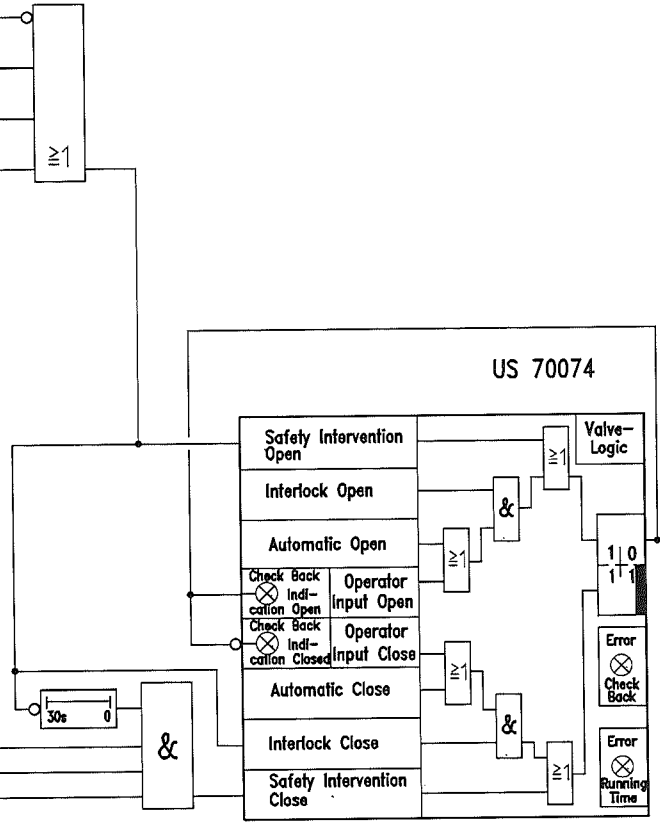

Path	Type	Signal/TAG-No.	Destination	Comment	Rang.
51					
52					
53					
54					
55					
56					
57					
58					
59					
60					
61					
62					
63					
64					
65					
66					
67					
68					
69					
70					
71					
72					
73					
74					
75					
76	0	US 70074	Solenoid valve off	Open FV 70074	
77			UV70074		
78					
79					
80					
81					
82					
83					
84					
85					
86					
87					
88					
89					
90					
91					
92					
93					
94					
95					
96					
97					
98					

JOB NO.	FILE NO	REV.	DATE	REVISIONS	BY	CHKD.
		Rev3	08.6.07	"as built"	Frohn	Stippich
		Rev2	02.2.06		Frohn	Eichler

PROJECT NAME: ASU KOSICE

PLANT PART: NITROGEN COMPRESSORS

AIR LIQUIDE

Air Liquide AGS GmbH
Fütingsweg 34
47805 Krefeld

DRAWING NAME:
N2 COMPRESSOR 1
SOLENOID VALVE RECYCLE VALVE
UV 70074

SIZE: A3

FUNKTION DIAGRAM

DRWG. NO.: K70101_210.dwg

PROJ. NO.: K70101

REPLACES: REPLACED BY: BASED:

DATE: 17.06.2005
AUTHOR: Frohn
CHECK: Eichler
STD.:

Rang.	Comment	Origin	Type	Signal-/TAG-No.	Path
					1
					2
					3
					4
	NC1 main drive off	fr. page no. 201/77	0	HS 70001	5
					6
	Trip NC1	fr. page no. 202/63	1	US 70000	7
					8
					9
					10
					11
					12
					13
					14
					15
					16
					17
					18
					19
					20
					21
					22
					23
					24
					25
					26
					27
					28
					29
					30
					31
					32
					33
					34
					35
	Gas blow out	Y > 99%	1	HIC 70035	36
					37
					38
					39
					40
					41
					42
					43
					44
					45
					46
					47
					48

Function

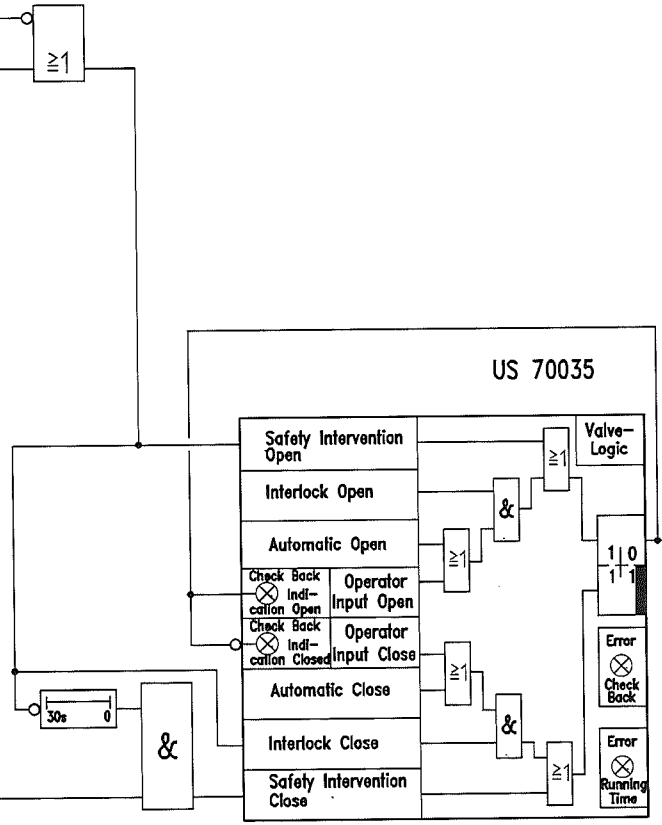

Path	Type	Signal/TAG-No.	Destination	Comment	Rang.
51					
52					
53					
54					
55					
56					
57					
58					
59					
60					
61					
62					
63					
64					
65					
66					
67					
68					
69					
70					
71					
72					
73					
74					
75					
76	0	US 70035	Solenoid valve off	Open HV 70035	
77			UV70035		
78					
79					
80					
81					
82					
83					
84					
85					
86					
87					
88					
89					
90					
91					
92					
93					
94					
95					
96					
97					
98					

JOB NO.	FILE NO	REV.	DATE	REVISIONS	BY	CHKD.
		Rev3	08.6.07	"as built"	Frohn	Stippich
		Rev2	02.2.06		Frohn	Eichler

PROJECT NAME: ASU KOSICE

PLANT PART: NITROGEN COMPRESSORS

AIR LIQUIDE

Air Liquide AGS GmbH
Fütingsweg 34
47805 Krefeld

DRAWING NAME:
N2 COMPRESSOR 1
SOLENOID VALVE BLOW OUT VALVE
UV 70035

SIZE: A3

FUNKTION DIAGRAM

DRWG. NO.: K70101_211.dwg

PROJ. NO.: K70101

REPLACES: REPLACED BY: BASED:

DATE: 17.06.2005
AUTHOR: Frohn
CHECK: Eichler
STD.:

Rang.	Comment	Origin	Type	Signal-/TAG-No.	Path
	Press. beh. 3rd stage NC1	P-Transmitter	1	PT 70031	8
	Reset surge protect.	Software push button	1	US70074_RES	24
	Recycle valve open	End position switch	1	GH 70074	40

Function

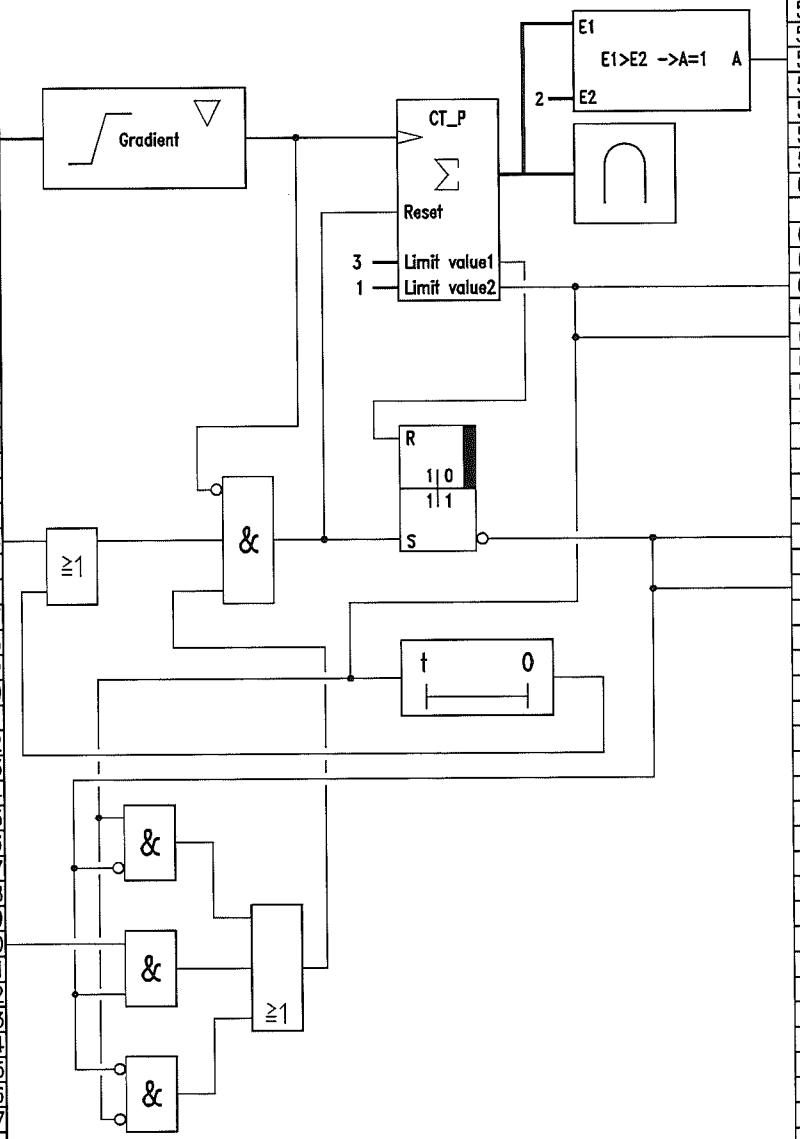

Path	Type	Signal/TAG-No.	Destination	Comment	Rang.
55	1	USHH 70074	to page no. 210/11	Surge protection	
64	1	UAH 70074	Alarm OS	"1 surge push"	
66	1	UH 70074	to page no. 213/25		
74	1	UAHH 70074	Alarm OS	"Surge protection"	
76	1	UHH 70074	to page no. 203/30	Surge protection	

JOB NO.	FILE NO.	REV.	DATE	REVISIONS	BY	CHKD.
		Rev3	08.6.07	"as built"	Frohn	Stippich
		Rev2	02.2.06		Frohn	Eichler

PROJECT NAME: ASU KOSICE

PLANT PART: NITROGEN COMPRESSORS

AIR LIQUIDE

Air Liquide AGS GmbH
Fütingsweg 34
47805 Krefeld

DRAWING NAME:
N2 COMPRESSOR 1
ANTI SURGE PROTECTION U70074

SIZE: A3

FUNKTION DIAGRAM

DRWG. NO.: K70101_212.dwg

PROJ. NO.: K70101

REPLACES: REPLACED BY: BASED:

DATE: 17.06.2005
AUTHOR: Frohn
CHECK: Eichler
STD.:

Comment	Origin	Type	Signal-/TAG-No.	Path
				1
				2
				3
				4
				5
				6
				7
				8
				9
				10
				11
				12
				13
Output signal	0...100%	E	F70074_XD	14
FIC70074				15
				16
				17
				18
				19
				20
+ 10%	Factor 0,1	E		21
				22
				23
				24
Surge protection	fr. page no. 212/66	1	UH 70074	25
				26
				27
				28
				29
				30
				31
				32
				33
				34
				35
				36
				37
				38
				39
				40
				41
				42
				43
				44
				45
				46
				47
				48

Function

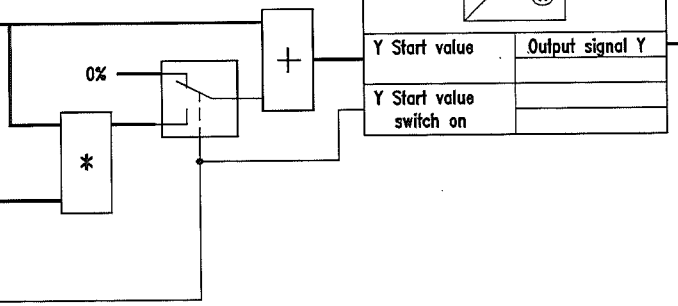

Path	Type	Signal/TAG-No.	Destination	Comment
51				
52				
53				
54				
55				
56				
57				
58				
59				
60				
61				
62				
63				
64				
65	E	U70074	to AC-controller	Manual output signal
66			FIC 70074	recycle valve
67				
68				
69				
70				
71				
72				
73				
74				
75				
76				
77				
78				
79				
80				
81				
82				
83				
84				
85				
86				
87				
88				
89				
90				
91				
92				
93				
94				
95				
96				
97				
98				

JOB NO.	FILE NO	REV.	DATE	REVISIONS	BY	CHKD.
		Rev3	08.6.07	"as built"	Frohn	Stippich
		Rev2	02.2.06		Frohn	Eichler

PROJECT NAME: ASU KOSICE

PLANT PART: NITROGEN COMPRESSORS

AIR LIQUIDE

Air Liquide AGS GmbH
Fütingsweg 34
47805 Krefeld

DRAWING NAME: N2 COMPRESSOR 1
MANUAL OUTPUT SIGNAL RECYCLE
HIC 70074

SIZE: A3

FUNKTION DIAGRAM

DRWG. NO.: K70101_213.dwg

PROJ. NO.: K70101

REPLACES: REPLACED BY: BASED:

DATE: 17.06.2005
AUTHOR: Frohn
CHECK: Eichler
STD.:

Comment	Origin	Type	Signal-/TAG-No.	Path
GAN discharge NC1	Analog value	E	P 70035	12
Trip NC1	from page no.202/65	1	US 70000	28
Partial Trip NC1	from page no.204/76	1	US 70000_2	30

Function

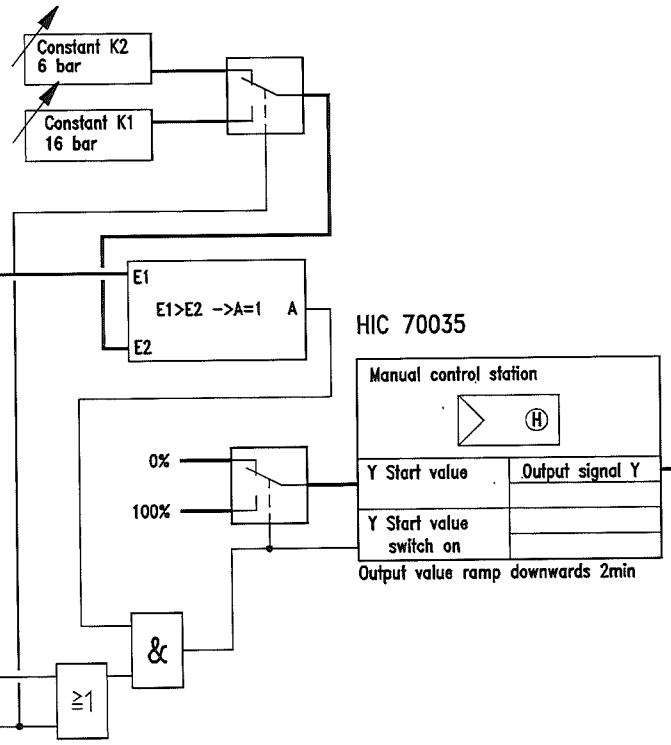

Path	Type	Signal/TAG-No.	Destination	Comment
70	1	HIC 70035	Positioner 20...4mA = 0-100%	Control valve HV70035 Blow off valve NC1

Rev3	08.6.07	"as built"	Frohn	Stippich
Rev2	02.2.06		Frohn	Eichler
JOB NO.	FILE NO.	REV.	DATE	REVISIONS	BY	CHKD.

PROJECT NAME: ASU KOSICE

PLANT PART: NITROGEN COMPRESSORS

AIR LIQUIDE

Air Liquide AGS GmbH
Fütingsweg 34
47805 Krefeld

DRAWING NAME: N2 COMPRESSOR 1
BLOW OFF VALVE HIC70035

SIZE: A3

FUNKTION DIAGRAM

DRWG. NO.: K70101_214.dwg

PROJ. NO.: K70101

REPLACES: REPLACED BY: BASED:

DATE: 17.06.2005
AUTHOR: Frohn
CHECK: Eichler
STD.:

Comment	Origin	Type	Signal-/TAG-No.	Path
				1
				2
				3
				4
MP-GAN to TOP2	PD-transmitter	E	FT 70041	5
				6
MP-GAN to TOP2	P-transmitter	E	PT 70041	7
				8
MP-GAN to TOP2	Pt100	E	TE 70041	9
				10
				11
				12
				13
				14
				15
				16
				17
				18
				19
				20
				21
				22
				23
				24
				25
				26
				27
				28
				29
				30
				31
				32
				33
				34
				35
				36
				37
				38
				39
				40
				41
				42
				43
				44
				45
				46
				47
				48

Function

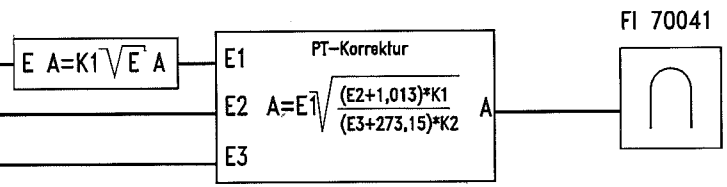

Path	Type	Signal/TAG-No.	Destination	Comment
51				
52				
53				
54				
55				
56				
57				
58				
59				
60				
61				
62				
63				
64				
65				
66				
67				
68				
69				
70				
71				
72				
73				
74				
75				
76				
77				
78				
79				
80				
81				
82				
83				
84				
85				
86				
87				
88				
89				
90				
91				
92				
93				
94				
95				
96				
97				
98				

JOB NO.	FILE NO.	REV.	DATE	REVISIONS	BY	CHKD.
		Rev3	08.6.07	"as built"	Frohn	Stippich
		Rev2	02.2.06		Frohn	Eichler

PROJECT NAME: ASU KOSICE

PLANT PART: NITROGEN COMPRESSORS

AIR LIQUIDE

Air Liquide AGS GmbH
Fütingsweg 34
47805 Krefeld

DRAWING NAME:
N2 COMPRESSOR 1+2
MP-GAN TO TOP2
F70041

SIZE: A3

FUNKTION DIAGRAM

DRWG. NO.: K70101_214a.dwg

PROJ. NO.: K70101

REPLACES: REPLACED BY: BASED:

DATE: 17.06.2005
AUTHOR: Frohn
CHECK: Eichler
STD.:

Comment	Origin	Type	Signal-/TAG-No.	Path
NC2 main drive	Check back signal	1	EH 77001	4
Reset trip NC2	Reset button OS	1	HS 770000	15
Ready to start NC2	fr. page no. 219/70	1	UH 77003	32
Trip NC2 compr.	fr. page no. 216/57	1	US 77000	44

Function

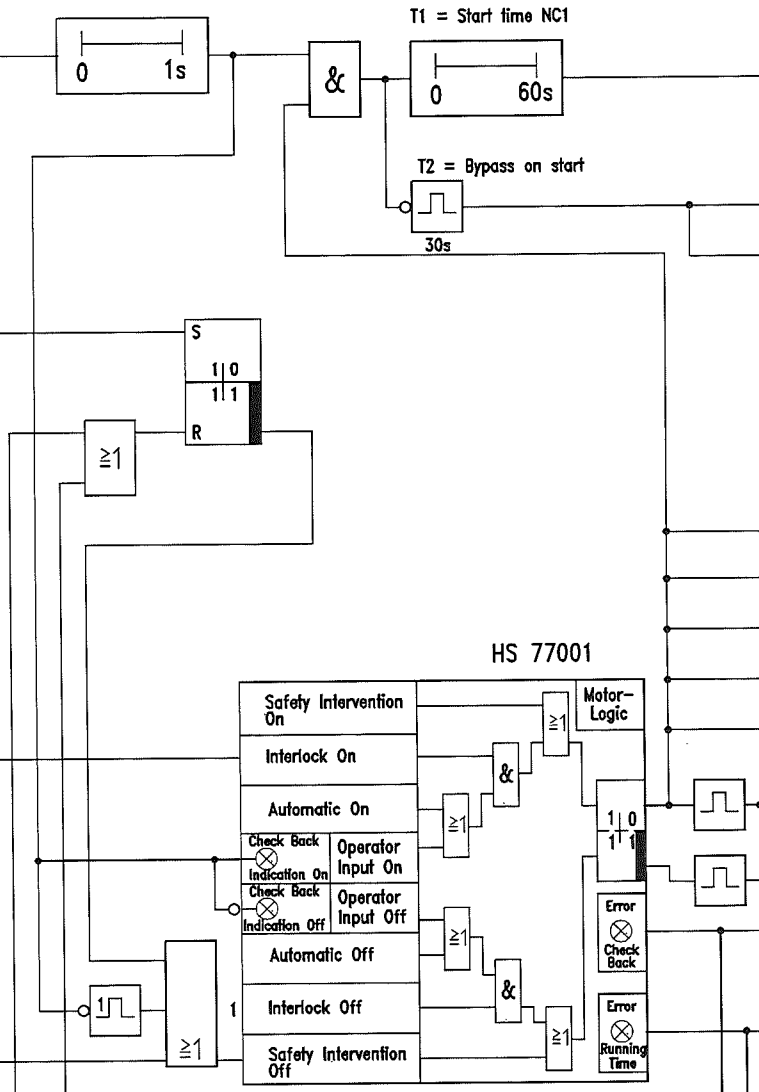

Path	Type	Signal/TAG-No.	Destination	Comment
55	1	EH 77001_del	to page no. 224/34	
60	1	US 77700	Factor 3	Trip multiplier
61				limit for vibrations
62	0	US 77700	Factor 1	1
73	1	US 77001	to page no. 219/33	Ready to start
75	0	US 77001	to page no. 224/5	Open recyclef valve
76				FV 77074
77	0	US 77001	to page no. 225/5	Open blow off valve
78				HV 77035
79	1	US 77001	Signal to MCC	Motor heating off
80				US 77706
81	1	US 77001	Signal to MCC	NC1 main drive on
84	1	HH 77001	Motor starter	On signal motor NC2
85	1		to page no. 214/5	
87	1	HL 77001	Motor starter	Off signal motor NC2
89	1	HS 77001_CB	Alarm OS	"Check back error"
90				NC2
93	1	HS 77001_RT	Alarm OS	"Running time error"
94				NC2

JOB NO.	FILE NO	REV.	DATE	REVISIONS	BY	CHKD.
		Rev3	08.6.07	"as built"	Frohn	Stippich
		Rev2	02.2.06		Frohn	Eichler

PROJECT NAME: ASU KOSICE

PLANT PART: NITROGEN COMPRESSORS

AIR LIQUIDE

Air Liquide AGS GmbH
Fütingsweg 34
47805 Krefeld

DRAWING NAME: N2 COMPRESSOR 2 MAIN DRIVE HS77001

SIZE: A3 — FUNKTION DIAGRAM

DRWG. NO.: K70101_215.dwg

PROJ. NO.: K70101

REPLACES: REPLACED BY:

DATE: 17.06.2005
AUTHOR: Frohn
CHECK: Eichler
STD.:

BASED:

Comment	Origin	Type	Signal-/TAG-No.	Path
				1
				2
Reset Trip NC2	Software reset button	1	HS 77000	3
				4
Main motor NC2 off	fr. page no. 217/55	0	EH77001_dyn	5
				6
Oil temp. NC2	Value > Max2	1	THH 77854	7
				8
Oil pressure NC2	Value < Min2	1	PLL 77854	9
				10
				11
				12
Axial displacement	Value > Max2	1	GHH 77738	13
Axial displacement	Value > Max2	1	GHH 77743	14
				15
Vibration 1st stage	Value > Max2	1	XHH 77736	16
Vibration 2nd stage	Value > Max2	1	XHH 77738	17
Vibration 3rd stage	Value > Max2	1	XHH 77740	18
Vibration free shaft	Value > Max2	1	XHH 77742	19
				20
Bearing 1.stage rad.	Value > Max2	1	THH 77736	21
Bearing 1.stage ax.	Value > Max2	1	THH 77737	22
Bearing 2.stage rad.	Value > Max2	1	THH 77738	23
Bearing 2.stage ax.	Value > Max2	1	THH 77739	24
Bearing 3.stage rad.	Value > Max2	1	THH 77740	25
Bearing 3.stage ax.	Value > Max2	1	THH 77741	26
Bearing 4.stage rad.	Value > Max2	1	THH 77742	27
Bearing 4.stage ax.	Value > Max2	1	THH 77743	28
				29
				30
				31
				32
				33
				34
				35
				36
				37
				38
				39
				40
				41
				42
Motor winding U	Value > Max2	1	THH 70715	43
Motor winding V	Value > Max2	1	THH 70718	44
Motor winding W	Value > Max2	1	THH 70721	45
				46
Trip conditions MAC	fr. page no. 203/79	1	US 70000_1	47
				48

Function

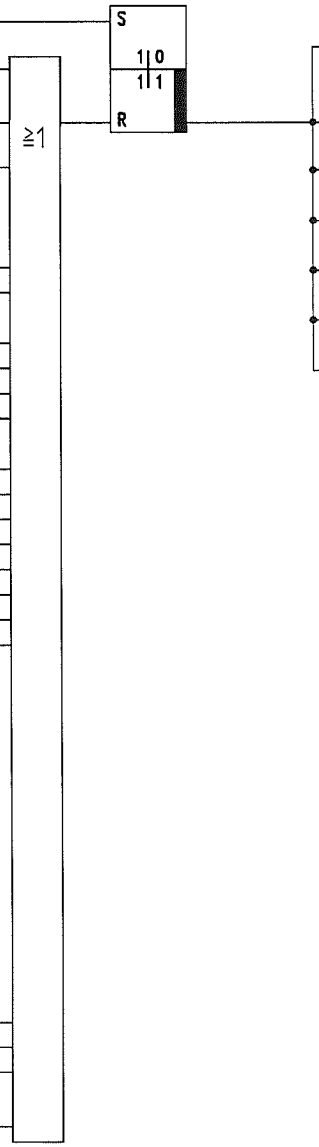

Path	Type	Signal/TAG-No.	Destination	Comment
51				
52				
53				
54	1	UA 77000	Alarm OS	Trip NC2
55				
56				
57	1	US 77000	to page no. 215/44	Trip N2 compressor 2
58				
59	1	US 77000	to page no. 219/23	Ready to start
60				UH 77003
61	1	US 77000	to page no. 224/7	Open recycle valve
62				UV 77074
63	1	US 77000	to page no. 225/7	Open blow off valve
64				UV 77035
65	1	US 77000	to page no. 230/28	Open blow off valve
66				HV 77035
67	1	US 77000	HIC77036, Y=0%	Close MP-GAN
68				HK 77036
69				
70				
71				
72				
73				
74				
75				
76				
77				
78				
79				
80				
81				
82				
83				
84				
85				
86				
87				
88				
89				
90				
91				
92				
93				
94				
95				
96				
97				
98				

JOB NO.	FILE NO	REV.	DATE	REVISIONS	BY	CHKD.
		Rev3	08.6.07	"as built"	Frohn	Stippich
		Rev2	02.2.06		Frohn	Eichler

PROJECT NAME: ASU KOSICE

PLANT PART: NITROGEN COMPRESSORS

AIR LIQUIDE

Air Liquide AGS GmbH
Fütingsweg 34
47805 Krefeld

DRAWING NAME: N2 COMPRESSOR 2 Trip NC2 US77000

SIZE: A3

FUNKTION DIAGRAM

DRWG. NO.: K70101_216.dwg

PROJ. NO.: K70101

REPLACES: REPLACED BY: BASED:

DATE: 17.06.2005
AUTHOR: Frohn
CHECK: Eichler
STD.:

Comment	Origin	Type	Signal-/TAG-No.	Path
				1
				2
				3
				4
Start air compressor	fr. page no. 215/85	1	HH 77001	5
				6
				7
				8
				9
				10
				11
				12
				13
				14
				15
				16
				17
				18
				19
				20
				21
Emergency shut down	Contact ESD-relay	1	HA 77001	22
				23
Press. before 1.stage	Value < Max2	1	PHH 77001	24
				25
before stage 2 NC1	Value > Max2	1	THH 77015	26
before stage 3 NC1	Value > Max2	1	THH 77025	27
Discharge NC1	Value > Max2	1	THH 77035	28
				29
Surge protection	from page 226/76	1	UHH 77074	30
				31
				32
				33
				34
				35
				36
				37
				38
				39
				40
				41
				42
				43
				44
				45
				46
				47
				48

Function

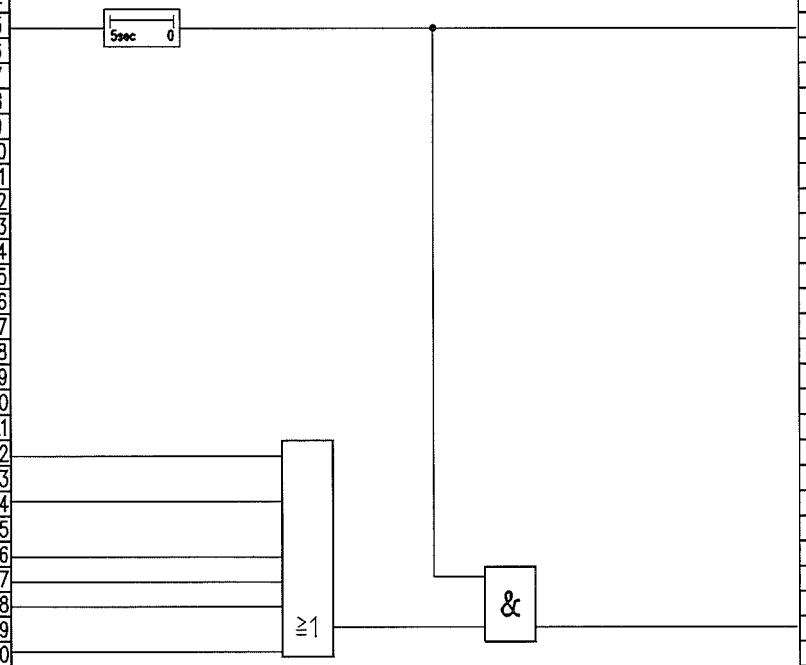

Path	Type	Signal/TAG-No.	Destination	Comment
51				
52				
53				
54				
55	1	US 77001_dyn	to page no. 216/5	
56				
57				
58				
59				
60				
61				
62				
63				
64				
65				
66				
67				
68				
69				
70				
71				
72				
73				
74				
75				
76				
77				
78				
79	1	US 77000_1	to page no. 216/47	Trip conditions
80				
81				
82				
83				
84				
85				
86				
87				
88				
89				
90				
91				
92				
93				
94				
95				
96				
97				
98				

JOB NO.	FILE NO	REV.	DATE	REVISIONS	BY	CHKD.
		Rev3	08.6.07	"as built"	Frohn	Stippich
		Rev2	02.2.06		Frohn	Eichler

PROJECT NAME: ASU KOSICE

PLANT PART: NITROGEN COMPRESSORS

AIR LIQUIDE

Air Liquide AGS GmbH
Fütingsweg 34
47805 Krefeld

DRAWING NAME:
N2 COMPRESSOR 2
TRIP CONDITIONS MAC US77000.1

SIZE: A3

FUNKTION DIAGRAM

DRWG. NO.: K70101_217.dwg

PROJ. NO.: K70101

REPLACES: REPLACED BY: BASED:

DATE: 17.06.2005
AUTHOR: Frohn
CHECK: Eichler
STD.:

Comment	Origin	Type	Signal-/TAG-No.	Path
				1
				2
				3
				4
Reset Trip NC2	Software push button	1	HS 77000	5
				6
				7
				8
Trip cold box	from page no.102/65	1	US20000_dyn	9
one shot				10
				11
				12
				13
				14
				15
				16
				17
				18
				19
				20
				21
				22
				23
				24
				25
				26
				27
				28
				29
				30
				31
				32
				33
				34
				35
				36
				37
				38
				39
				40
				41
				42
				43
				44
				45
				46
				47
				48

Function

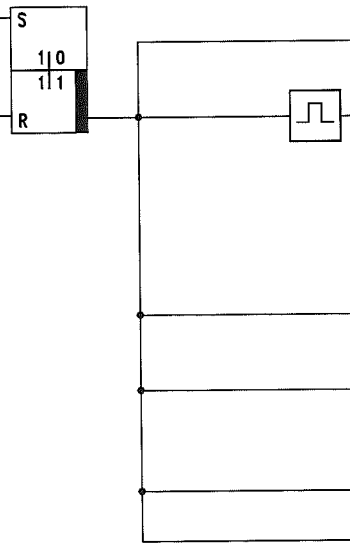

Path	Type	Signal/TAG-No.	Destination	Comment
51				
52				
53				
54				
55				
56	1	US 770000_2	Alarm OS	Partial Trip NC2
57				
58				
59	1	US 77000_2_dyn	Y = 0%, manual	FIC 77074, Y=100%,
60				manual
61				
62				
63				
64				
65				
66				
67	1	US77000_2	to page no. 224/9	Open recycle valve
68				US 77074
69				
70	1	US77000_2	PIC 77035	Position guide vane
71				FV77010 Y=0%,
72				manual
73				
74	1	US77000_2	HIC 77036 / Y=0%	Charge GAN
75				
76	1	US77000_2	to page no. 230/30	Open blow off valve
77				HV77035
78				
79				
80				
81				
82				
83				
84				
85				
86				
87				
88				
89				
90				
91				
92				
93				
94				
95				
96				
97				
98				

JOB NO.	FILE NO	REV.	DATE	REVISIONS	BY	CHKD.
		Rev3	08.6.07	"as built"	Frohn	Stippich
		Rev2	02.2.06		Frohn	Eichler

PROJECT NAME: ASU KOSICE

PLANT PART: N2 COMPRESSORS

AIR LIQUIDE

Air Liquide AGS GmbH
Fütingsweg 34
47805 Krefeld

DRAWING NAME: N2 COMPRESSOR 2
PARTIAL TRIP US77000.2

SIZE: A3

FUNKTION DIAGRAM

DRWG. NO.: K70101_218.dwg

PROJ. NO.: K70101

REPLACES: REPLACED BY:

DATE: 17.06.2005
AUTHOR: Frohn
CHECK: Eichler
STD.:

BASED:

Path	Comment	Origin	Type	Signal-/TAG-No.
9	MP-GAN	Y < 1%	1	HIC 77036
10	HK77036 closed			
11	Blow off valve	Y < 1%	1	HIC 77035
12	closed			
13	Guide vane NC2	End position switch	1	GL 77010
14	closed			
15	Recycle valve NC2	End position switch	1	GH 77074
16	opened			
17	Oil pressure NC2	Value < Min	1	PL 77854
19	Oil circuit NC2	Value < Min	1	TL 77854
23	Trip NC2	fr. page no. 216/59	1	US 77000_2
25	NC2 main drive	Check back signal	1	EH 77001
27	Enabeling main motor disabled	fr. page no. 220/73	1	EI 77001
31	Cooling water	Value < Min	1	FL 80001
33	Entrance open	from page no.215/73	1	HS 70001
35	LP-GAN to compr. open	Y > 99%	1	F20005_Y100
37	LP-GAN-product	Value < Min	1	FL 20005

Function

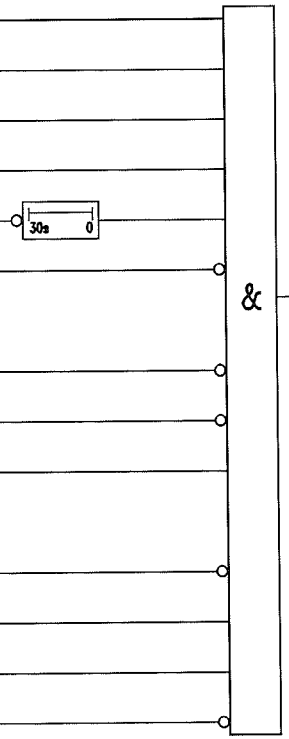

Path	Type	Signal/TAG-No.	Destination	Comment
67	1	UH 77003	Monitoring OS	"Ready to start NC2"
70	1	UH 77003	to page no. 215/32	Ready to start NC2

JOB NO.	FILE NO.	REV.	DATE	REVISIONS	BY	CHKD.
		Rev3	08.6.07	"as built"	Frohn	Stippich
		Rev2	02.2.06		Frohn	Eichler

PROJECT NAME: ASU KOSICE

PLANT PART: NITROGEN COMPRESSORS

AIR LIQUIDE

Air Liquide AGS GmbH
Fütingsweg 34
47805 Krefeld

DRAWING NAME: N2 COMPRESSOR 2 READY TO START UH77003

SIZE: A3

FUNKTION DIAGRAM

DRWG. NO.: K70101_219.dwg

PROJ. NO.: K70101

REPLACES: REPLACED BY: BASED:

DATE: 17.06.2005
AUTHOR: Frohn
CHECK: Eichler
STD.:

Rang.	Comment	Origin	Type	Signal-/TAG-No.	Path
					1
					2
					3
					4
					5
					6
	NC2 motor drive	Check back signal	1	EH 77001	7
					8
					9
					10
					11
					12
					13
					14
					15
					16
					17
					18
					19
					20
					21
					22
					23
					24
					25
					26
					27
					28
					29
					30
					31
					32
					33
					34
					35
					36
					37
					38
					39
					40
					41
					42
					43
					44
					45
					46
					47
					48

Function

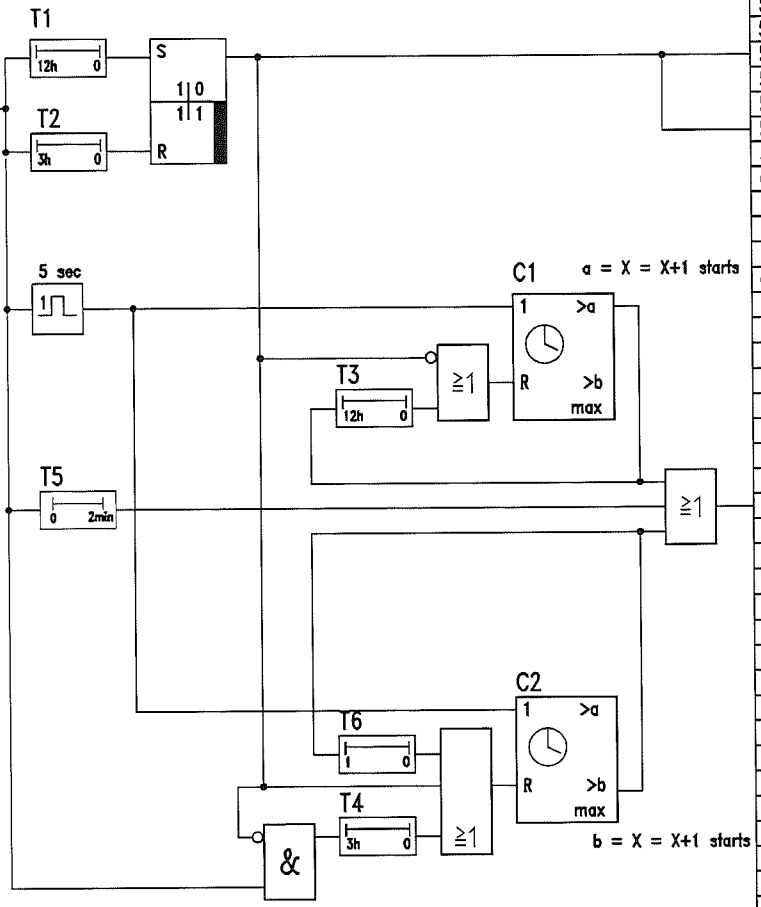

T1 = Time for motor is cold
T2 = Time for motor is warm
T3 = Reset time after 3 failed cold starts
T4 = Reset time adter 1 sucsessful warm start
T5 = Minimum disable time
C1 = Counter for cold starts
C2 = Counter for warm starts

Path	Type	Signal/TAG-No.	Destination	Comment	Rang.
51					
52					
53					
54					
55	1			Main motor cold	
56					
57					
58	0			Main motor warm	
59					
60					
61					
62					
63					
64					
65					
66					
67					
68					
69					
70					
71					
72					
73	1	EL 77001	to page no. 219/27	Enabeling switch control	
74				main motor	
75					
76					
77					
78					
79					
80					
81					
82					
83					
84					
85					
86					
87					
88					
89					
90					
91					
92					
93					
94					
95					
96					
97					
98					

JOB NO.	FILE NO.	REV.	DATE	REVISIONS	BY	CHKD.
		Rev3	08.6.07	"as built"	Frohn	Stippich
		Rev2	02.2.06		Frohn	Eichler

PROJECT NAME: ASU KOSICE

PLANT PART: NITROGEN COMPRESSORS

AIR LIQUIDE

Air Liquide AGS GmbH
Fütingsweg 34
47805 Krefeld

DRAWING NAME: N2 COMPRESSOR 2
ENABELING MAIN MOTOR EL77001

SIZE: A3 | FUNKTION DIAGRAM

DRWG. NO.: K70101_220.dwg

PROJ. NO.: K70101

REPLACES: | REPLACED BY: | BASED:

DATE: 17.06.2005
AUTHOR: Frohn
CHECK: Eichler
STD.:

Rang.	Comment	Origin	Type	Signal-/TAG-No.	Path
					1
					2
					3
	NC2 main drive on	Check back signal	1	EH 77001	4
					5
					6
					7
					8
					9
	Oil heater NC2 on	Check back signal	1	EH 77810	10
					11
					12
					13
	Temp. oil heater	Limit switch > Max	0	TH 77815	14
					15
					16
					17
	Temp. oil heater	Limit switch > Max	0	TH 77810	18
					19
					20
					21
					22
					23
					24
					25
					26
					27
	Oil heater NC2 on	Check back signal	1	EH 77815	28
					29
					30
					31
					32
					33
					34
					35
					36
					37
					38
					39
					40
	Temp. oil tank	Limit switch < Max	1	THH 77810	41
					42
	Temp oil tank	Control contact	1	TC 77810	43
					44
					45
	Temp. oil tank	Limit switch < Max	1	THH 77815	46
	Temp oil tank	Control contact	1	TC 77815	47
					48

Function

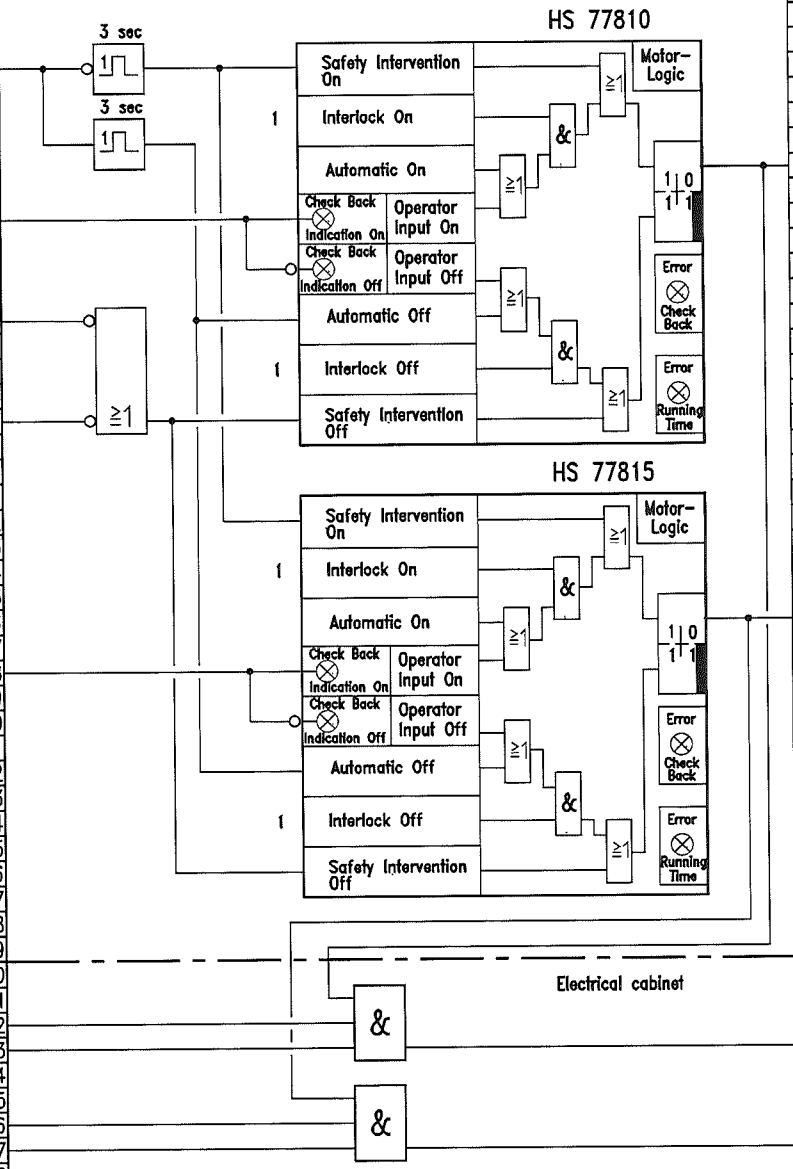

Path	Type	Signal/TAG-No.	Destination	Comment	Rang.
51					
52					
53					
54					
55					
56					
57					
58	1	US 77810	Signal to MCC	Oil heater NC2 on	
59					
60					
61					
62					
63					
64					
65					
66					
67					
68					
69					
70					
71					
72					
73					
74					
75					
76	1	US 77815	Signal to MCC	Oil heater NC2 on	
77					
78					
79					
80					
81					
82					
83					
84					
85					
86					
87					
88					
89					
90					
91					
92					
93	1	W 77810	ON	Oil heater NC2	
94					
95					
96					
97	1	W 77815	ON	Oil heater NC2	
98					

JOB NO.	FILE NO	REV.	DATE	REVISIONS	BY	CHKD.
		Rev3	08.6.07	"as built"	Frohn	Stippich
		Rev2	02.2.06		Frohn	Eichler

PROJECT NAME: ASU KOSICE

PLANT PART: NITROGEN COMPRESSORS

AIR LIQUIDE

Air Liquide AGS GmbH
Fütingsweg 34
47805 Krefeld

DRAWING NAME:
N2 COMPRESSOR 2
OIL HEATER HS77810 / HS77815

SIZE: A3

FUNKTION DIAGRAM

DRWG. NO.: K70101_221.dwg

PROJ. NO.: K70101

REPLACES: REPLACED BY: BASED:

DATE: 17.06.2005
AUTHOR: Frohn
CHECK: Eichler
STD.:

Rang.	Comment	Origin	Type	Signal-/TAG-No.	Path
	Oil pressure NC2	Value < Min1	1	PL 77854	5
	NC2 main drive on	Check back signal	1	EH 77001	10
	Oil demister on	Check back signal	1	EH 77803	20
	Aux. oil pump on	Check back signal	1	EH 77820	24
	Reset Trip NC2	Software reset button	1	HS 77000	40
	Seal gas press. Min	Pressure switch	0	PL 77753	45

Function

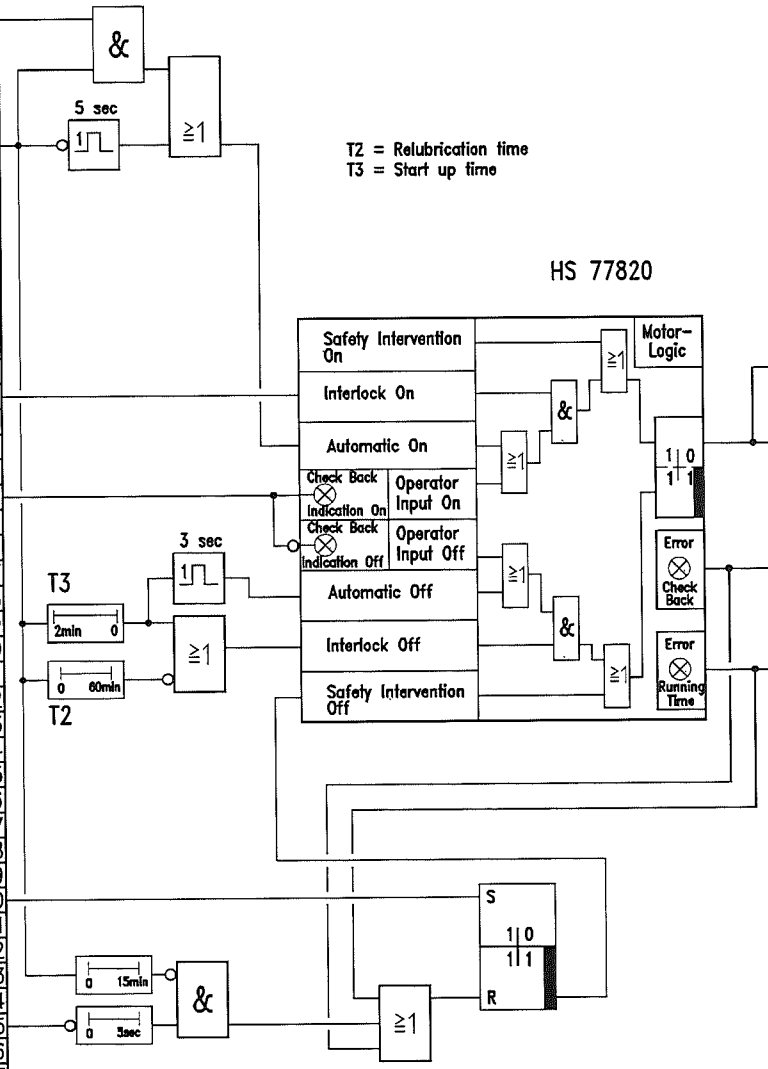

Path	Type	Signal/TAG-No.	Destination	Comment	Rang.
69	1	HS 77803	to page no. 223/10	Oil demister NC2 on	
72	1	HS 77820	Signal to MCC	Aux. oil pump NC2 on	
77	1	HS 77820_CB	Alarm OS	"Check back error"	
				Aux. oil pump NC2	
81	1	HS 77820_RT	Alarm OS	"Running time error"	
				Aux. oil pump NC2	

JOB NO.	FILE NO.	REV.	DATE	REVISIONS	BY	CHKD.
		Rev3	08.6.07	"as built"	Frohn	Stippich
		Rev2	02.2.06		Frohn	Eichler

PROJECT NAME: ASU KOSICE

PLANT PART: NITROGEN COMPRESSORS

AIR LIQUIDE

Air Liquide AGS GmbH
Fütingsweg 34
47805 Krefeld

DRAWING NAME:
N2 COMPRESSOR 2
AUXILLIARY OIL PUMP HS77820

SIZE: A3

FUNKTION DIAGRAM

DRWG. NO.: K70101_222.dwg

PROJ. NO.: K70101

REPLACES: REPLACED BY: BASED:

DATE: 17.06.2005
AUTHOR: Frohn
CHECK: Eichler
STD.:

Rang.	Comment	Origin	Type	Signal-/TAG-No.	Path
	Oil demister on	Check back signal	1	EH 77803	18
	Aux. oil pump on	Check back signal	1	EH 77820	24
	Reset Trip NC2	Software reset button	1	HS 77000	33

Function

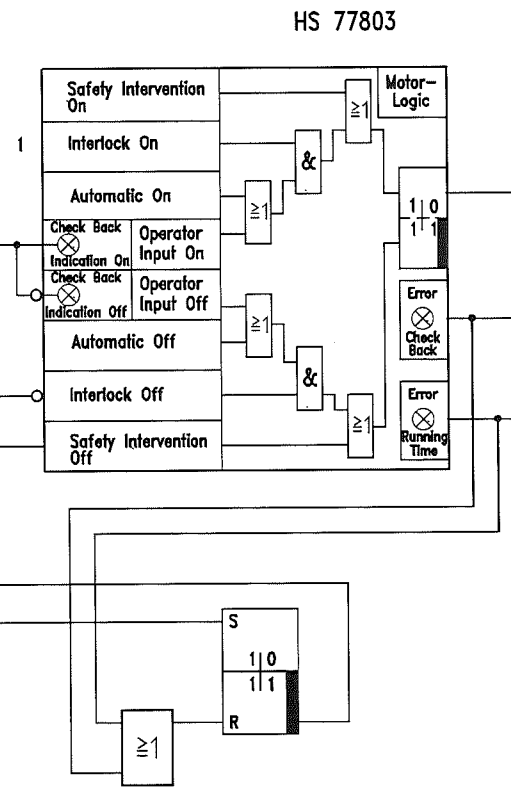

Path	Type	Signal/TAG-No.	Destination	Comment	Rang.
66	1	HS 77803	Signal to MCC	Oil demister NC2 on	
71	1	HS 77803_CB	Alarm OS	"Check back error"	
72				Oil demister NC2	
75	1	HS 77803_RT	Alarm OS	"Running time error"	
76				Oil demister NC2	

JOB NO.	FILE NO	REV.	DATE	REVISIONS	BY	CHKD.
		Rev3	08.6.07	"as built"	Frohn	Stippich
		Rev2	02.2.06		Frohn	Eichler

PROJECT NAME: ASU KOSICE

PLANT PART: NITROGEN COMPRESSORS

AIR LIQUIDE

Air Liquide AGS GmbH
Fütingsweg 34
47805 Krefeld

DRAWING NAME:
N2 COMPRESSOR 2
OIL DEMISTER HS77803

SIZE: A3 — FUNKTION DIAGRAM

DRWG. NO.: K70101_223.dwg

PROJ. NO.: K70101

REPLACES: REPLACED BY: BASED:

DATE: 17.06.2005
AUTHOR: Frohn
CHECK: Eichler
STD.:

Rang.	Comment	Origin	Type	Signal-/TAG-No.	Path
					1
					2
					3
					4
	NC2 main drive off	fr. page no. 215/75	0	HS 77001	5
					6
	Trip NC2	fr. page no. 216/61	1	US 77000	7
					8
	Partial Trip NC2	fr. page no. 218/67	1	US 77000_2	9
					10
	Surge protection	fr. page no. 226/55	1	USHH 77074	11
					12
					13
					14
					15
					16
					17
					18
					19
					20
					21
					22
					23
					24
					25
					26
					27
					28
					29
					30
					31
					32
					33
	Main drive on	from page 215/55	1	EH 77001_del	34
	Recycle valve open	End position switch	1	GH 77074	35
	Gas flow outlet	Y > 99%	1	HIC 77074	36
					37
					38
					39
					40
					41
					42
					43
					44
					45
					46
					47
					48

Function

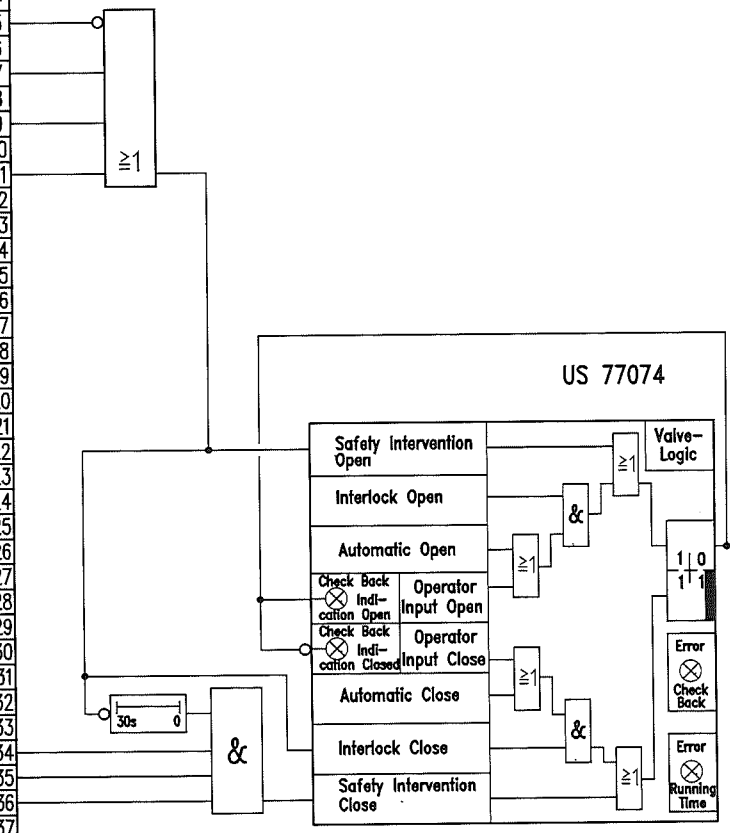

Path	Type	Signal/TAG-No.	Destination	Comment	Rang.
51					
52					
53					
54					
55					
56					
57					
58					
59					
60					
61					
62					
63					
64					
65					
66					
67					
68					
69					
70					
71					
72					
73					
74					
75					
76	0	US 77074	Solenoid valve off	Open FV 77074	
77			UV77074		
78					
79					
80					
81					
82					
83					
84					
85					
86					
87					
88					
89					
90					
91					
92					
93					
94					
95					
96					
97					
98					

JOB NO.	FILE NO.	REV.	DATE	REVISIONS	BY	CHKD.
		Rev3	08.6.07	"as built"	Frohn	Stippich
		Rev2	02.2.06		Frohn	Eichler

PROJECT NAME: ASU KOSICE

PLANT PART: NITROGEN COMPRESSORS

AIR LIQUIDE

Air Liquide AGS GmbH
Fütingsweg 34
47805 Krefeld

DRAWING NAME:
N2 COMPRESSOR 2
SOLENOID VALVE RECYCLE VALVE
UV 77074

SIZE: A3 | FUNKTION DIAGRAM

DRWG. NO.: K70101_224.dwg

PROJ. NO.: K70101

REPLACES: | REPLACED BY: | BASED:

DATE: 17.06.2005
AUTHOR: Frohn
CHECK: Eichler
STD.:

Rang.	Comment	Origin	Type	Signal-/TAG-No.	Path
					1
					2
					3
					4
	NC2 main drive off	fr. page no. 215/77	0	HS 77001	5
					6
	Trip NC2	fr. page no. 216/63	1	US 77000	7
					8
					9
					10
					11
					12
					13
					14
					15
					16
					17
					18
					19
					20
					21
					22
					23
					24
					25
					26
					27
					28
					29
					30
					31
					32
					33
					34
					35
	Gas blow out	Y > 99%	1	HIC 77035	36
					37
					38
					39
					40
					41
					42
					43
					44
					45
					46
					47
					48

Function

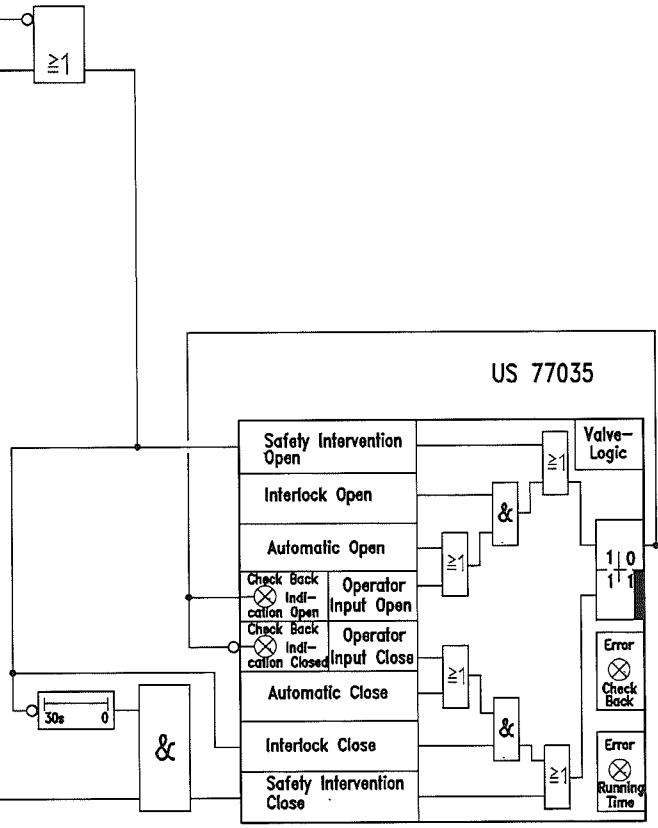

Path	Type	Signal/TAG-No.	Destination	Comment	Rang.
51					
52					
53					
54					
55					
56					
57					
58					
59					
60					
61					
62					
63					
64					
65					
66					
67					
68					
69					
70					
71					
72					
73					
74					
75					
76	0	US 77035	Solenoid valve off	Open HV 77035	
77			UV77035		
78					
79					
80					
81					
82					
83					
84					
85					
86					
87					
88					
89					
90					
91					
92					
93					
94					
95					
96					
97					
98					

JOB NO.	FILE NO.	REV.	DATE	REVISIONS	BY	CHKD.
		Rev3	08.6.07	"as built"	Frohn	Stippich
		Rev2	02.2.06		Frohn	Eichler

PROJECT NAME: ASU KOSICE

PLANT PART: NITROGEN COMPRESSORS

AIR LIQUIDE

Air Liquide AGS GmbH
Fütingsweg 34
47805 Krefeld

DRAWING NAME:
N2 COMPRESSOR 2
SOLENOID VALVE BLOW OUT VALVE
UV 77035

SIZE	A3	FUNKTION DIAGRAM	DATE 17.06.2005
			AUTHOR Frohn
			CHECK Eichler
			STD.
DRWG. NO.	K70101_225.dwg		
PROJ. NO.	K70101		Page no. 225
			OF 230 Pages
REPLACES:	REPLACED BY:		BASED:

Rang.	Comment	Origin	Type	Signal-/TAG-No.	Path
					1
					2
					3
					4
					5
					6
					7
	Press. beh. 3rd stage	P-Transmitter	1	PT 77031	8
	NC2				9
					10
					11
					12
					13
					14
					15
					16
					17
					18
					19
					20
					21
					22
					23
	Reset surge protect.	Software push button	1	US77074_RES	24
					25
					26
					27
					28
					29
					30
					31
					32
					33
					34
					35
					36
					37
					38
					39
	Recycle valve open	End position switch	1	GH 77074	40
					41
					42
					43
					44
					45
					46
					47

Function

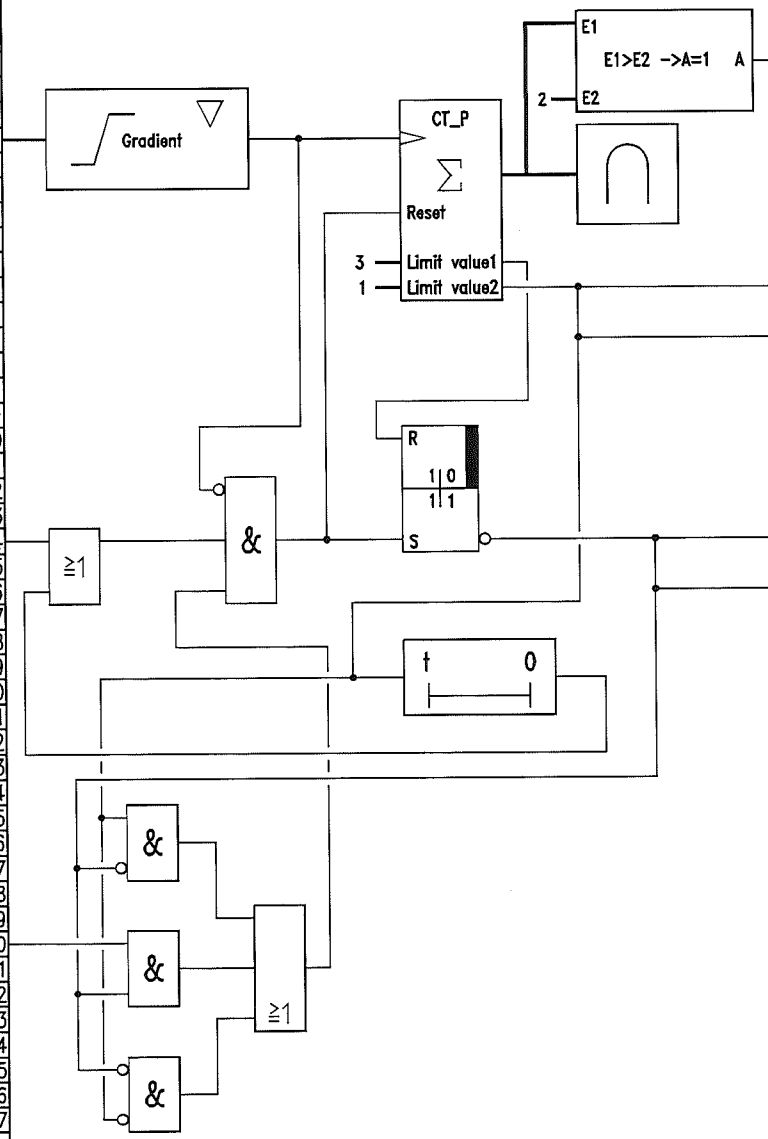

Path	Type	Signal/TAG-No.	Destination	Comment	Rang.
51					
52					
53					
54					
55	1	USHH 77074	to page no. 224/11	Surge protection	
56					
57					
58					
59					
60					
61					
62					
63					
64	1	UAH 77074	Alarm OS	"1 surge push"	
65					
66	1	UH 77074	to page no. 227/25		
67					
68					
69					
70					
71					
72					
73					
74	1	UAHH 77074	Alarm OS	"Surge protection"	
75					
76	1	UHH 77074	to page no. 217/30	Surge protection	
77					
78					
79					
80					
81					
82					
83					
84					
85					
86					
87					
88					
89					
90					
91					
92					
93					
94					
95					
96					
97					
98					

JOB NO.	FILE NO.	REV.	DATE	REVISIONS	BY	CHKD.
		Rev3	08.6.07	"as built"	Frohn	Stippich
		Rev2	02.2.06		Frohn	Eichler

PROJECT NAME: ASU KOSICE

PLANT PART: NITROGEN COMPRESSORS

AIR LIQUIDE

Air Liquide AGS GmbH
Fütingsweg 34
47805 Krefeld

DRAWING NAME:
N2 COMPRESSOR 2
ANTI SURGE PROTECTION U77074

SIZE	A3	FUNKTION DIAGRAM	DATE 17.06.2005
			AUTHOR Frohn
			CHECK Eichler
			STD.
DRWG. NO.	K70101_226.dwg		
PROJ. NO.	K70101		Page no. 226
			Of 230 Pages
REPLACES:	REPLACED BY:		BASED:

Comment	Origin	Type	Signal-/TAG-No.	Path
Output signal FIC77074	0...100%	E	F77074_XD	14
+ 10%	Factor 0,1	E		21
Surge protection	fr. page no. 226/66	1	UH 77074	25

Function

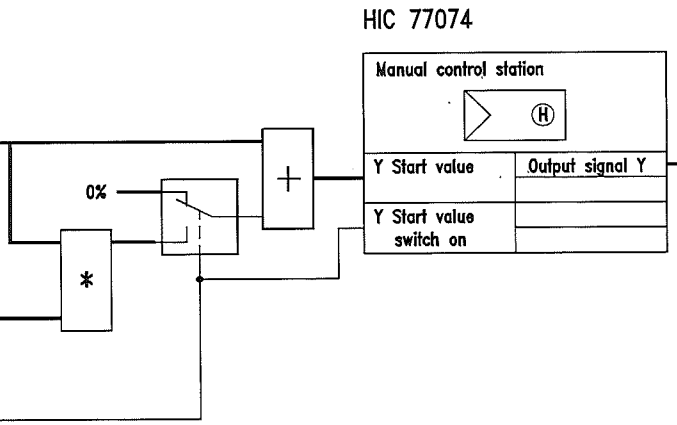

Path	Type	Signal/TAG-No.	Destination	Comment
65	E	U77074	to AC-controller FIC 77074	Manual output signal recycle valve

JOB NO.	FILE NO	REV.	DATE	REVISIONS	BY	CHKD.
		Rev3	08.6.07	"as built"	Frohn	Stippich
		Rev2	02.2.06		Frohn	Eichler

PROJECT NAME: ASU KOSICE

PLANT PART: NITROGEN COMPRESSORS

AIR LIQUIDE

Air Liquide AGS GmbH
Fütingsweg 34
47805 Krefeld

DRAWING NAME: N2 COMPRESSOR 2
MANUAL OUTPUT SIGNAL RECYCLE
HIC 77074

SIZE: A3 | FUNKTION DIAGRAM

DRWG. NO.: K70101_227.dwg

PROJ. NO.: K70101

REPLACES: | REPLACED BY: | BASED:

DATE: 17.06.2005
AUTHOR: Frohn
CHECK: Eichler
STD.:

Comment	Origin	Type	Signal-/TAG-No.	Path
				1
				2
				3
				4
				5
				6
				7
				8
				9
				10
				11
				12
				13
				14
				15
				16
				17
				18
				19
				20
				21
				22
				23
				24
				25
				26
				27
				28
				29
				30
				31
				32
				33
				34
				35
				36
				37
				38
				39
				40
				41
				42
				43
				44
				45
				46
				47
				48

Function

Path	Type	Signal/TAG-No.	Destination	Comment
51				
52				
53				
54				
55				
56				
57				
58				
59				
60				
61				
62				
63				
64				
65				
66				
67				
68				
69				
70				
71				
72				
73				
74				
75				
76				
77				
78				
79				
80				
81				
82				
83				
84				
85				
86				
87				
88				
89				
90				
91				
92				
93				
94				
95				
96				
97				
98				

JOB NO.	FILE NO	REV.	DATE	REVISIONS	BY	CHKD.
		Rev3	08.6.07	"as built"	Frohn	Stippich
		Rev2	02.2.06		Frohn	Eichler

PROJECT NAME: ASU KOSICE

PLANT PART: NITROGEN COMPRESSORS

AIR LIQUIDE

Air Liquide AGS GmbH
Fütingsweg 34
47805 Krefeld

DRAWING NAME: N2 COMPRESSOR 2 SPARE

SIZE: A3

FUNKTION DIAGRAM

DRWG. NO.: K70101_228.dwg

PROJ. NO.: K70101

REPLACES: REPLACED BY: BASED:

DATE: 17.06.2005
AUTHOR: Frohn
CHECK: Eichler
STD.:

Rang.	Comment	Origin	Type	Signal-/TAG-No.	Path
					1
					2
					3
					4
					5
					6
					7
					8
					9
					10
					11
					12
					13
					14
					15
					16
					17
					18
					19
					20
					21
					22
					23
					24
					25
					26
					27
					28
					29
					30
					31
					32
					33
					34
					35
					36
					37
					38
					39
					40
					41
					42
					43
					44
					45
					46
					47
					48

Function

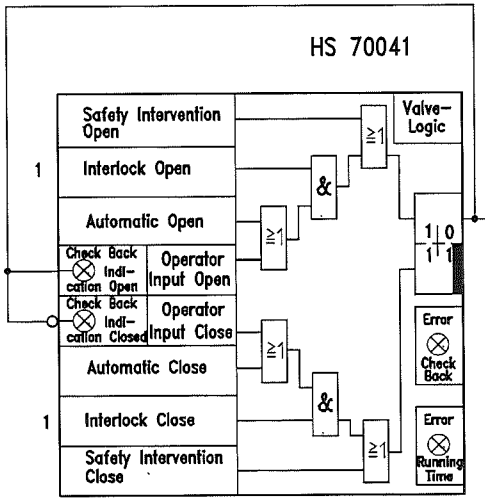

Path	Type	Signal/TAG-No.	Destination	Comment	Rang.
51					
52					
53					
54					
55					
56					
57					
58					
59					
60					
61					
62					
63					
64					
65					
66					
67					
68					
69					
70					
71					
72					
73					
74					
75					
76	1	HS 70041	Solenoid valve on	Open HK 70041	
77			UV70041		
78					
79					
80					
81					
82					
83					
84					
85					
86					
87					
88					
89					
90					
91					
92					
93					
94					
95					
96					
97					
98					

JOB NO.	FILE NO.	REV.	DATE	REVISIONS	BY	CHKD.
		Rev3	08.6.07	"as built"	Frohn	Stippich
		Rev2	02.2.06		Frohn	Eichler

PROJECT NAME: ASU KOSICE

PLANT PART: NITROGEN COMPRESSORS

AIR LIQUIDE

Air Liquide AGS GmbH
Fütingsweg 34
47805 Krefeld

DRAWING NAME: N2 COMPRESSOR 1+2
MP-GAN
HS 70041

SIZE: A3

FUNKTION DIAGRAM

DRWG. NO.: K70101_229.dwg

PROJ. NO.: K70101

REPLACES: REPLACED BY: BASED:

DATE: 17.06.2005
AUTHOR: Frohn
CHECK: Eichler
STD.:

Comment	Origin	Type	Signal-/TAG-No.	Path
GAN discharge NC2	Analog value	E	P 77035	12
Trip NC2	from page no.216/65	1	US 77000	28
Partial Trip NC2	from page no.218/76	1	US 77000_2	30

Function

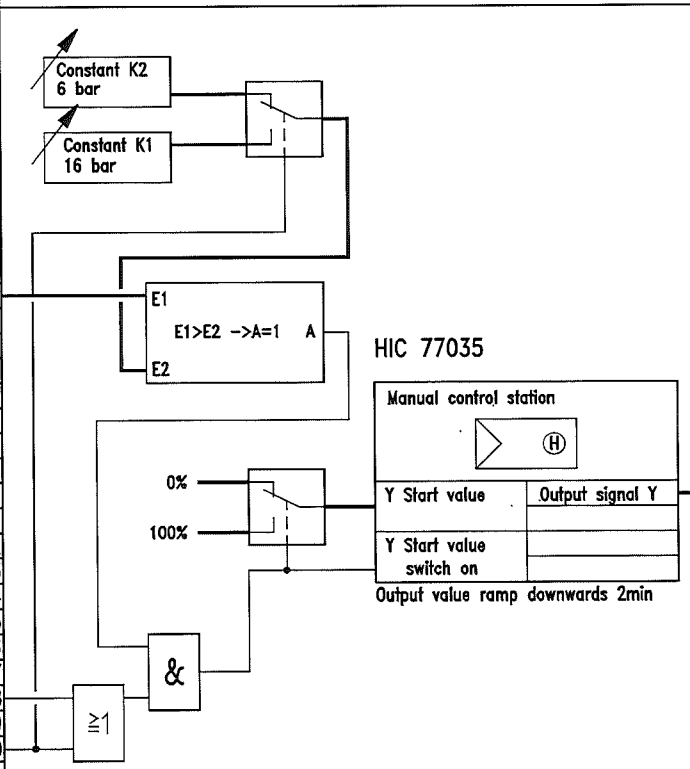

Path	Type	Signal/TAG-No.	Destination	Comment
70	1	HIC 77035	Positioner 20...4mA	Control valve
71			= 0-100%	HV77035
72				Blow off valve NC2

Rev3	08.6.07	"as built"	Frohn	Stippich
Rev2	02.2.06		Frohn	Eichler
JOB NO. FILE NO	REV.	DATE	REVISIONS	BY	CHKD.

PROJECT NAME: ASU KOSICE

PLANT PART: NITROGEN COMPRESSORS

AIR LIQUIDE

Air Liquide AGS GmbH
Fütingsweg 34
47805 Krefeld

DRAWING NAME:
N2 COMPRESSOR 2
BLOW OFF VALVE HIC 77035

SIZE A3 — FUNKTION DIAGRAM

DRWG. NO. K70101_230.dwg

PROJ. NO. K70101

REPLACES: REPLACED BY: BASED:

DATE 17.06.2005
AUTHOR Frohn
CHECK Eichler
STD.